Changing The Lamp

- Remove the clear reflector cover (K).

- Turn red lever to release.

- Remove lamp.

fig 9

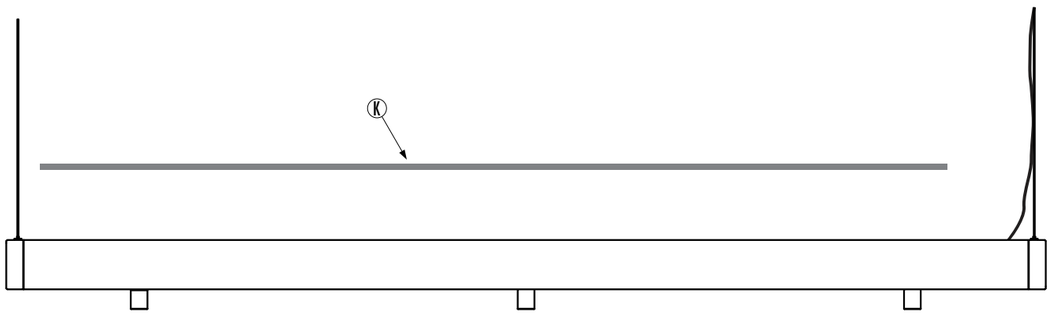

fig 10

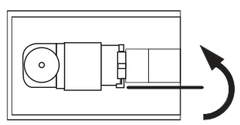

fig 11

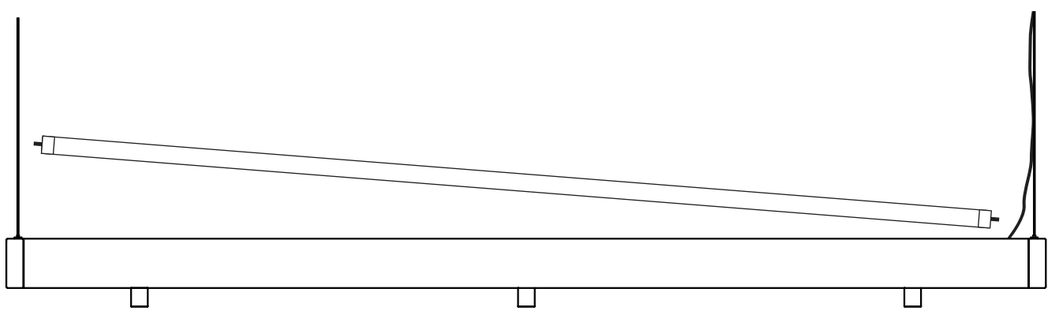

BRUCK LIGHTING SYSTEMS
15774 Gateway Circle Tustin, CA. 92780
www.brucklighting.com

For more assistance with technical questions please call our technical support staff at (714) 259-9959. You can also contact us by email at info@brucklightingsystems.com.

BRUCK.

KAIROS III with Uni-Plug

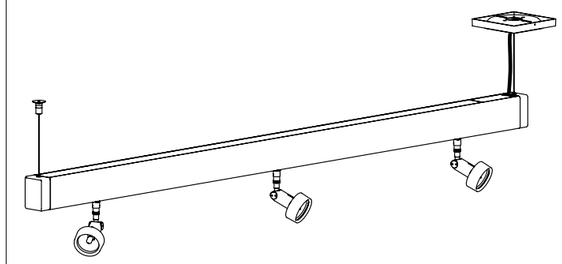

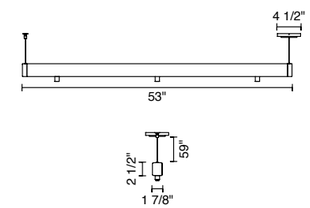

⚠ IMPORTANT SAFETY INSTRUCTIONS ⚠

1. THIS PRODUCT MUST BE INSTALLED BY A PERSON FAMILIAR WITH THE CONSTRUCTION AND OPERATION OF THE PRODUCT AND THE HAZARDS INVOLVED, IN ACCORDANCE WITH LOCAL AND NATIONAL CODE.
2. Save these instructions and refer to them when additions to or changes to the fixture configuration are made.
3. Do not install this fixture in damp or wet locations.
4. CAUTION - Do not install any fixture assembly closer than 6 inches from any curtain, or similar combustible material.
5. To reduce the risk of fire and electric shock, do not attempt to connect power tools, extension cords, appliances, and the like to the track.
6. This fixture MUST BE HARD WIRED. For all the wire connections, use Listed Wire Nuts.
7. Turn off power prior to any work on the systems.
8. Warranty is void in case of unauthorized modifications and/ or improper use.

READ ALL OF THESE INSTRUCTIONS BEFORE INSTALLATION

KAIROS PART NUMBER

300 454ch	chrome
300 454mc	matte chrome

INSTRUCTIONS

Note

DO NOT remove the protective film until the installation has been completed.

Two person's are required for installation of this fixture.

This fixture has 1 line fluorescent (Blue wire), 1 line halogen (Purple wire), 1 neutral (White wire), and 1 ground wiring (Green wire).

Step 1 Mounting

- Mark drill points on the ceiling.

- Supports should be mounted 53" apart

Step 2 Support 1

- Unscrew the base (A) from the suspension (B) and mount it to the ceiling with the screw (see fig 1).

(Mounting hardware included might not be suitable for desired location.)

- Screw the suspension (B) back onto the base (A) (see fig 2).

(If mounting onto a acoustic tile, wooded block should be used.)

fig 1

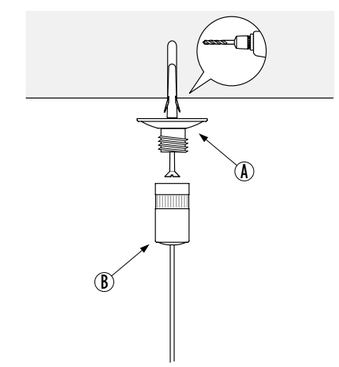

fig 2

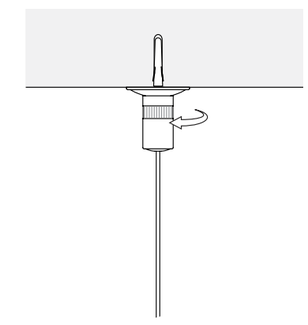

BRUCK.

Step 3 Support II

- Align the screws (C) on the mounting plate with the J-box and tighten firmly.

- Slide aircraft cable (D) over the notch (E) (see fig 4).

- Connect the wires (F) from the fixture to the power supply.

- Wire length can be adjusted by loosening the center cable lock (G).

- Place canopy cover (I) over the mounting plate and secure with allen screws (H) located on the sides of the base.

- Adjust the height of the fixture by feeding the cable into the cable gripper (J) or pushing it to release (see fig 5).

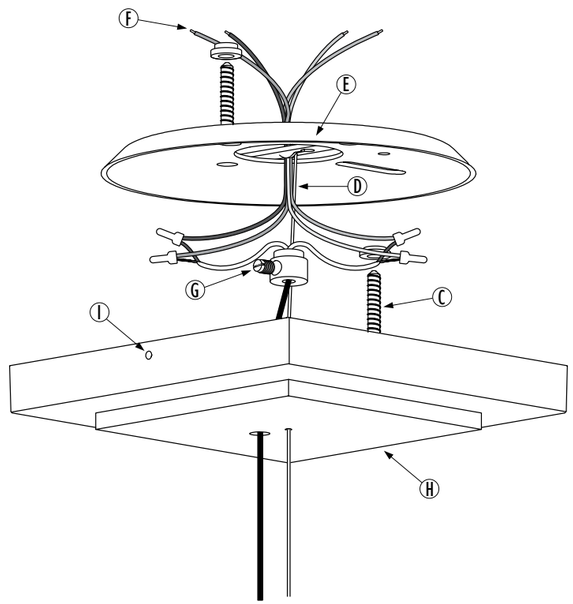

Aircraft Cable Over Notch

fig 4

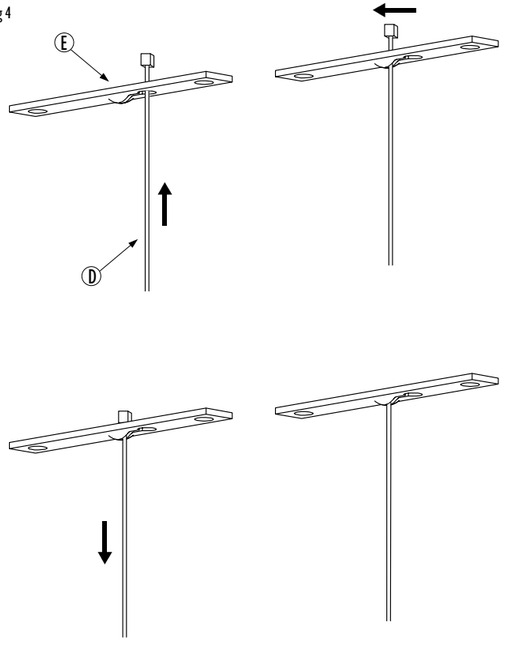

Adjust Kairos Height

fig 5

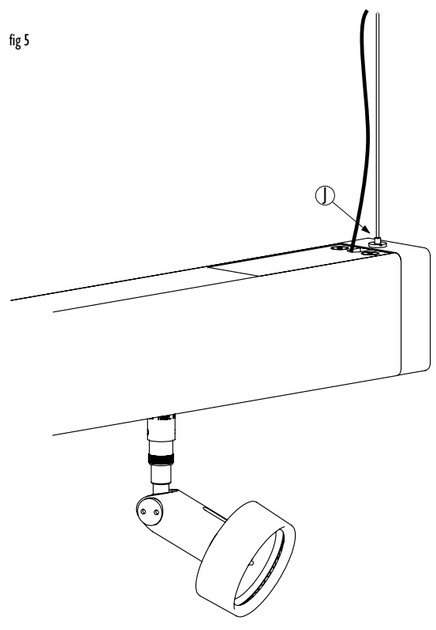

Step 4 Install Fixture

- Twist fixture onto socket.

- Place lamp into fixture.

fig 6

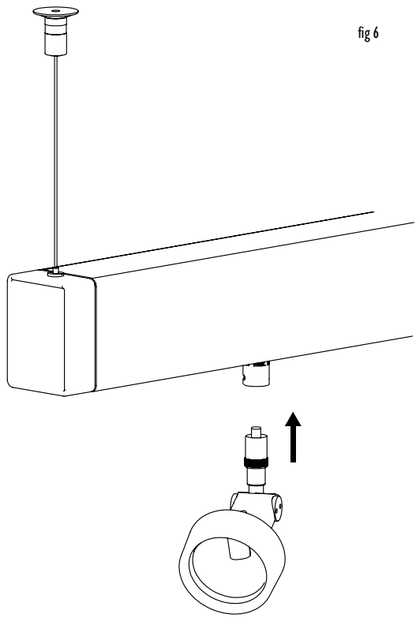

fig 7

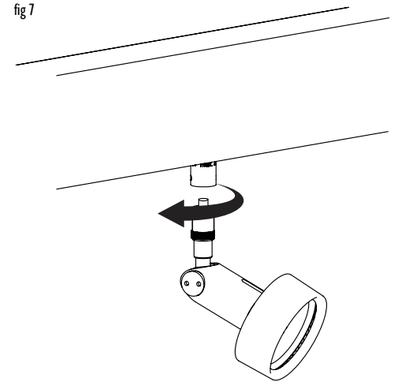

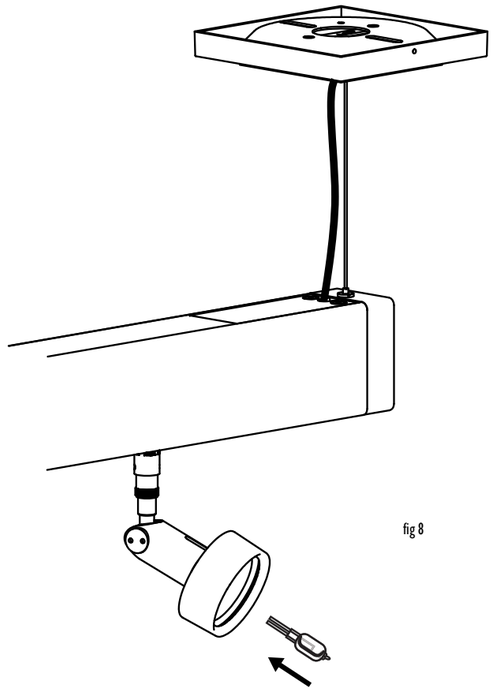

fig 8