BRUCK LIGHTING SYSTEMS
15774 Gateway Circle Tustin, CA. 92780
www.brucklighting.com

For more assistance with technical questions please call our technical support staff at (714) 259-9959. You can also contact us by email at info@brucklightingsystems.com.

BRUCK.

INSTALLATION AND WIRING DIAGRAM

USA

LEDRA SERIES LEDs

LEDRA™ AL-C

ART. NO.	135 331mc/f	matte chrome, frosted, LED white	135 333mc/f	matte chrome, frosted, LED green
	135 331-1mc/f	matte chrome, frosted, LED warm white	135 334mc/f	matte chrome, frosted, LED red
	135 332mc/f	matte chorme, frosted, LED blue	135 335mc/f	matte chrome, frosted, LED amber

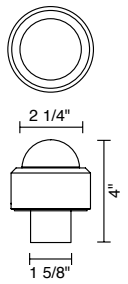

IMPORTANT SAFETY INSTRUCTIONS

1. THIS PRODUCT MUST BE INSTALLED BY A PERSON FAMILIAR WITH THE CONSTRUCTION AND OPERATION OF THE PRODUCT AND THE HAZARDS INVOLVED, IN ACCORDANCE WITH LOCAL NEC CODE.
2. WET LOCATION SUITABLE.
3. SUITABLE FOR SUSPENDED CEILING.
4. When mounting onto uneven surfaces, silicone must be applied inbetween the canopy housing and the surface to prevent water infiltration.
5. Turn off power prior to any work on the systems.
6. Warranty is void in case of unauthorized modifications and/ or improper use.
7. Must be attached to a 1/2″ NPT conduit fitting.
8. Not thru-wire rated.

READ ALL OF THESE INSTALLATION INSTRUCTIONS BEFORE INSTALLING THE FIXTURE

Contents of Delivery:
LEDRA AL-C - qty. (1)

Step 1.

Drill a 1 5/8″ hole into the mounting surface.

Step 2.

- Unscrew the set screw (B) from the AL-C cover (A) and unscrew the cover from the base (G).

- Remove the retaining ring (C) from the base with a needle nosed pliers and lift up the LED plate (D) with the LED driver attached.

- Place the rubber gasket (H) at the bottom of the product.

- Pull the wires (I) from the conduit into the wiring compartment in the AL-C.

Step 3.

- Align the base with the rubber gasket (H) so that the mounting screws (E) will go through. Screw the base (G) to the mounting surface. (Important: The rubber gasket (H) must be used at the bottom of the product before it is secured to the mounting base).

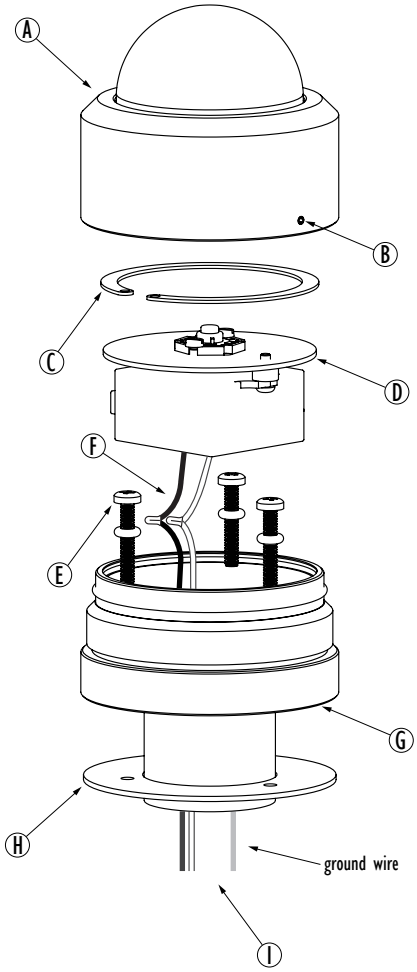

Step 4.

- Connect the white, black and ground wires from the conduit to the wires from the AL-C using UL listed wire nuts.

- Green wire should be grounded in accordance with local electrical codes.

- The wire connections should be made in the wiring compartment.

Step 5.

- Push the LED (D) and the LED driver back into the fixture and replace the retaining ring (C) in the fixture.

Step 6.

- Screw the AL-C cover (A) securely onto the base (G) and tighten the set screw (B) to complete the installation.